MALE END VIEW

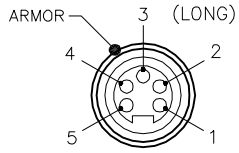

PAIRED #1 < 1 = BLACK
2 = WHITE
PAIRED #2 < 3 = GREEN/YELLOW
4 = BROWN
5 = BLUE

FEMALE END VIEW

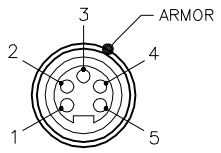

PAIRED #1 < 1 = BLACK
2 = WHITE
PAIRED #2 < 3 = GREEN/YELLOW
4 = BROWN
5 = BLUE

WIRING DIAGRAM

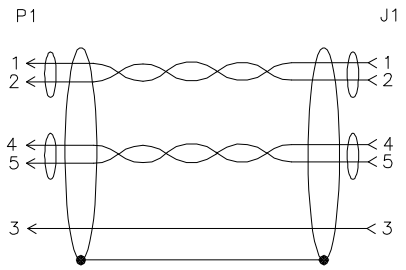

SPECIFICATIONS

CONTACT CARRIER MATERIAL	TPU
MOLDED HEAD MATERIAL/COLOR	TPU/BLACK
CONTACT MATERIAL/PLATING	BRASS/GOLD
COUPLING NUT MATERIAL/FINISH	STAINLESS STEEL/PASSIVATED
RATED CURRENT [A]	9.0 A
RATED VOLTAGE [V]	300 V
OUTER JACKET MATERIAL/COLOR	PVC/BLACK
INNER JACKET MATERIAL/COLOR	PVC/BLACK
CONDUCTOR INSULATION MATERIAL	PVC
NUMBER OF CONDUCTORS [AWG]	5x18 AWG
DRAIN/SHIELD	20 AWG/ALUMINUM–POLYESTER FOIL
CONDUCTOR ARRANGEMENT	2 SHIELDED TWISTED PAIRS, 1 GND, 1 DRAIN
ARMOR	INTERLOCKING ALUMINUM ARMOR
TEMPERATURE RATING	–40°C to +105°C (–40°F to +221°F)
PROTECTION CLASS	NEMA 1,3,4,4X,6P,12 & IECIP67,IP68,IP69,IP69K
CABLE RATINGS	UL: ITC/PLTC–ER, DIRECT BURIAL, 105C CSA: ACIC, 90C, 300V

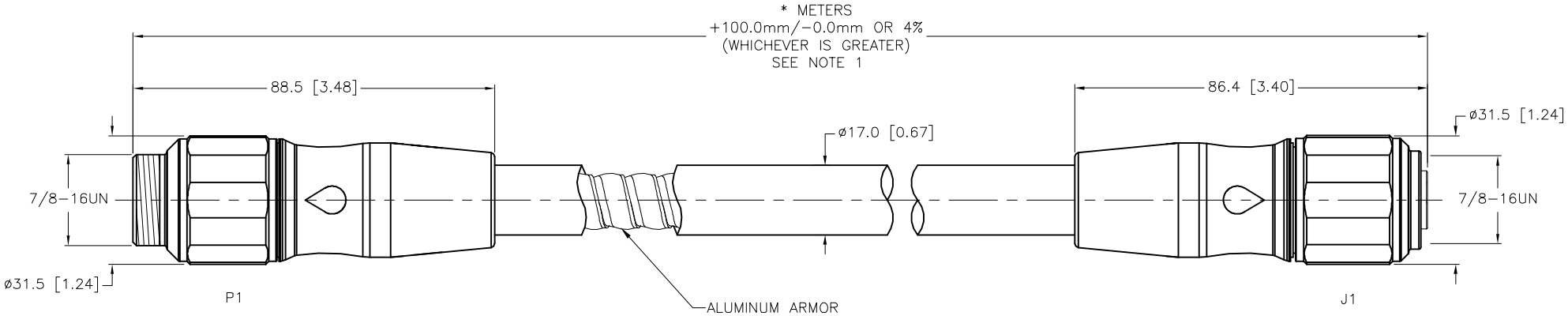

CABLE LENGTH	TOLERANCE*
ALL LENGTHS	+ 4% (OR 50mm) OF LENGTH – 0% (OR 0mm) OF LENGTH WHICHEVER IS GREATER
STRIP LENGTH	**TOLERANCE***
0–7mm	±0.5mm
8–29mm	±1.0mm
30–49mm	±2.0mm
50–69mm	±3.0mm
70–100mm	±4.0mm
OVER 100mm	±5.0mm
***UNLESS OTHERWISE SPECIFIED**	

NOTES:

1. "*" INDICATES CABLE LENGTH IN METERS. CONTACT TURCK TO ORDER SPECIFIC LENGTHS.

2. CABLE ARMOR IS CONNECTED TO THE COUPLING NUT(S).

SOURCE DRAWING - FOR REFERENCE ONLY

REV	DESCRIPTION	BY	DATE	ECO NO.
D	UPDATE PROTECTION CLASS	CBM	04/13/21	76628

RELATED DOCUMENTS
1.
2.
3.
4.

3RD ANGLE PROJECTION

THIS DRAWING IS CONFIDENTIAL AND THE PROPERTY OF TURCK INC. USE OF THIS DOCUMENT WITHOUT WRITTEN PERMISSION IS PROHIBITED.

TURCK

3000 CAMPUS DRIVE
MINNEAPOLIS, MN 55441
1–800–544–7769
(763) 553–7300
(763) 553–0708 fax
www.turck.us

MATERIAL: SEE SPECIFICATIONS

FINISH: SEE SPECIFICATIONS

ALL DIMENSIONS DISPLAYED ON THIS DRAWING ARE FOR REFERENCE ONLY

CONTACT TURCK FOR MORE INFORMATION

DRFT: KMY | DATE: 11/25/13
APVD: J.S. | SCALE: 1=1.5

UNIT OF MEASUREMENT
MILLIMETER [INCH]
DO NOT SCALE THIS DRAWING

DESCRIPTION: P–RSVB RKVB 544A–1802–*M

IDENTIFICATION NO.

REV: D

FILE: 777032586

SHEET 1 OF 1